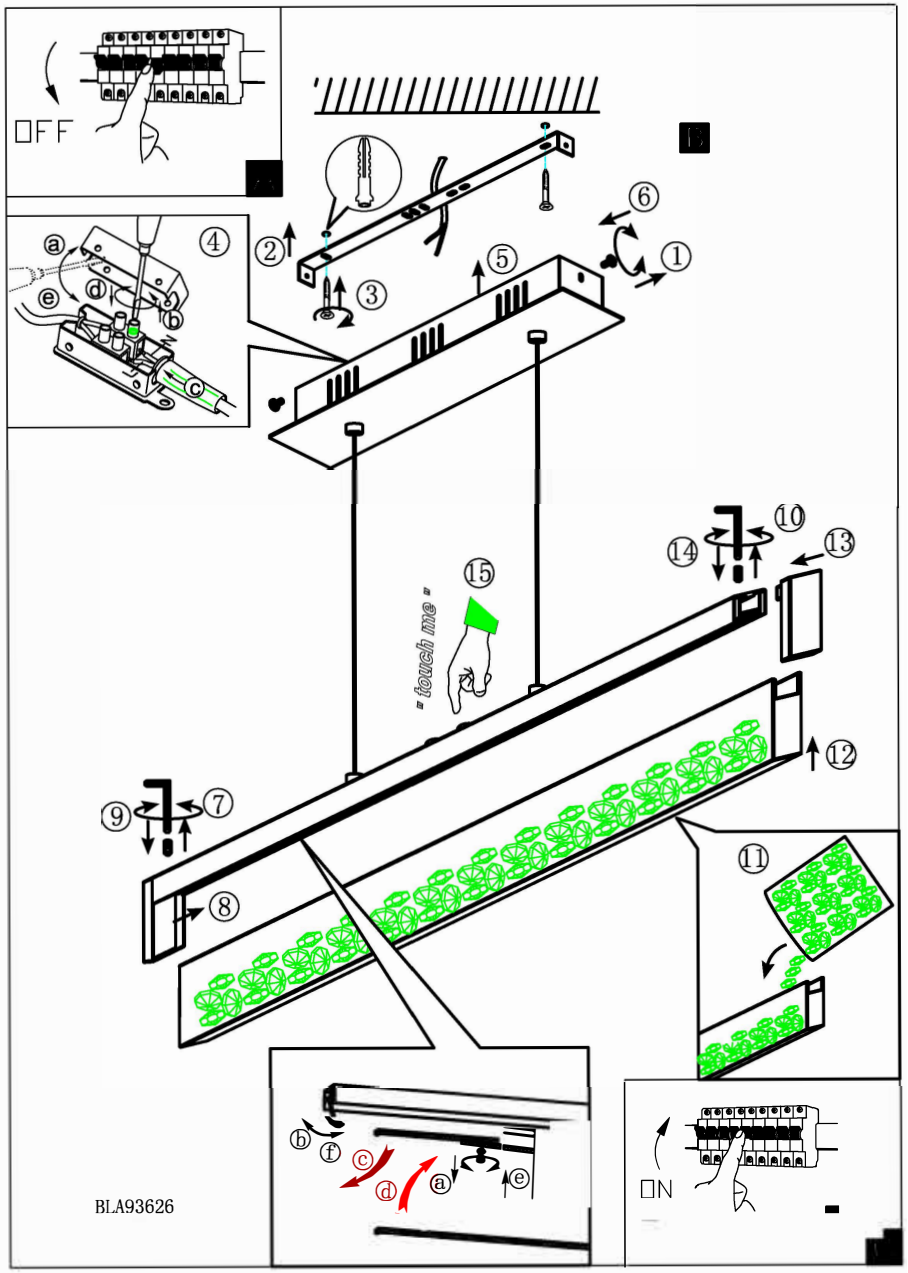
OFF
ON
" touch me "
BLA93626