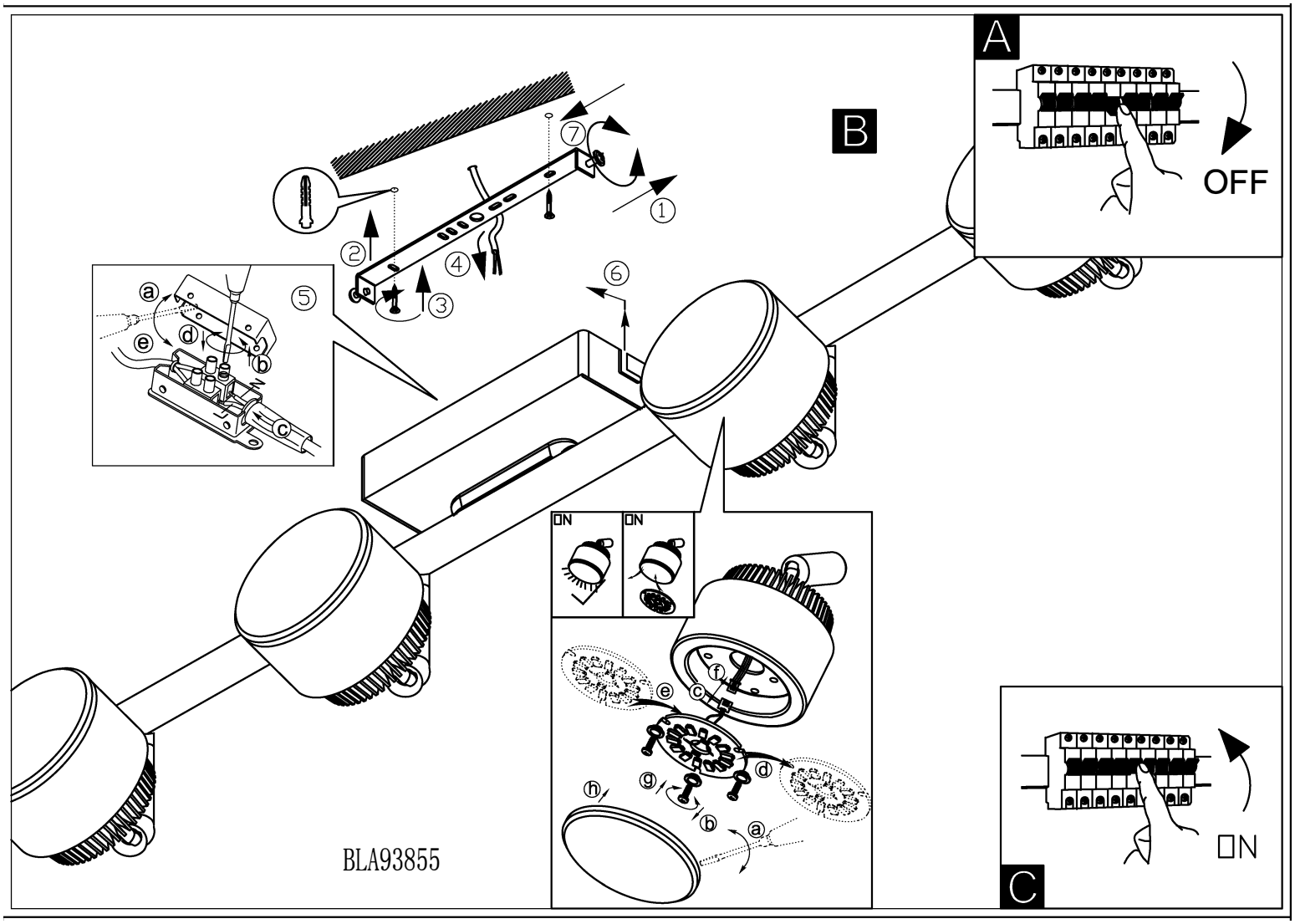
A
OFF
B
C
ON
BLA93855