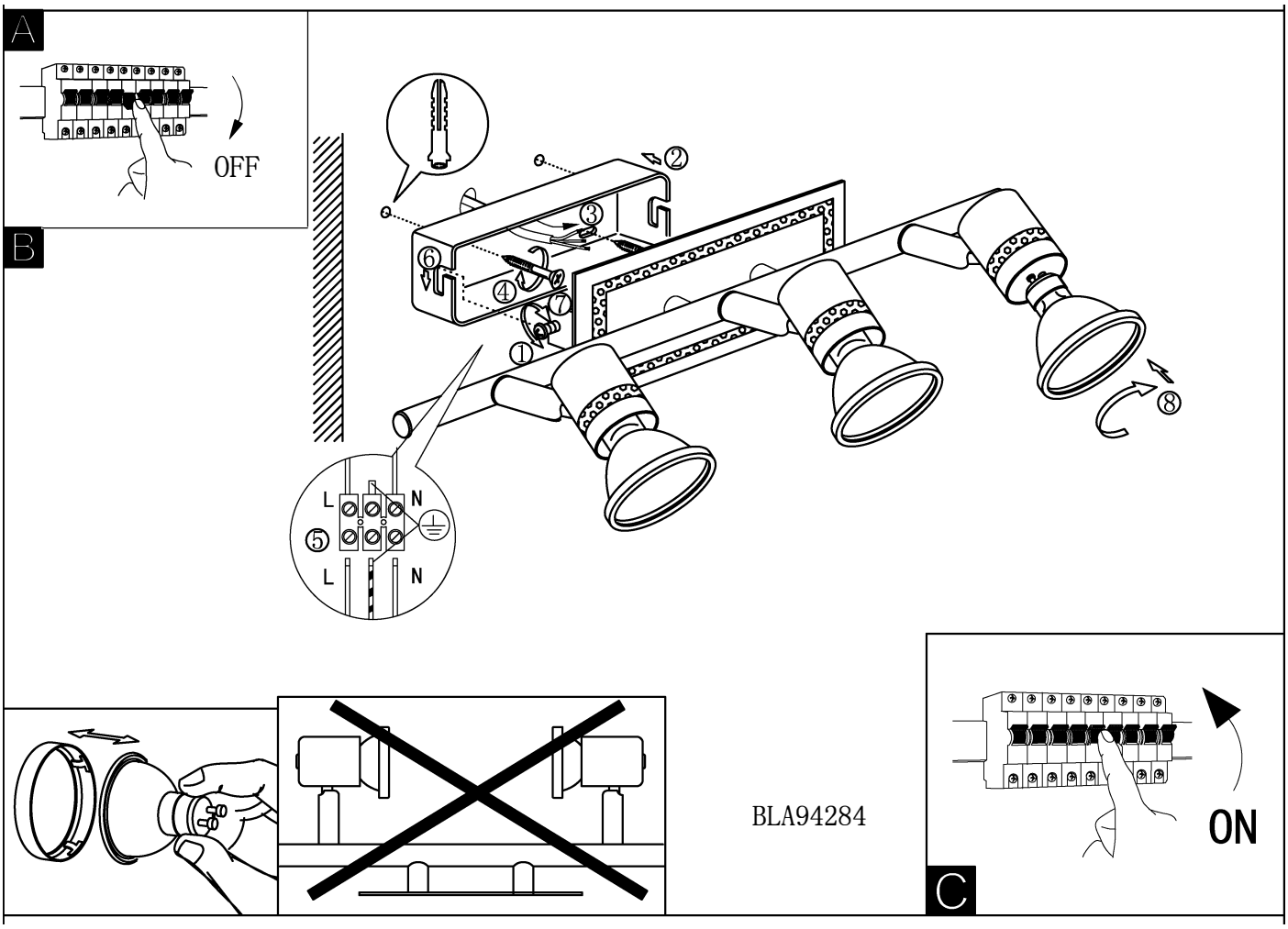
A
OFF
B
①
②
③
④
⑤
⑥
⑦
⑧
L
N
L
N
BLA94284
ON
C