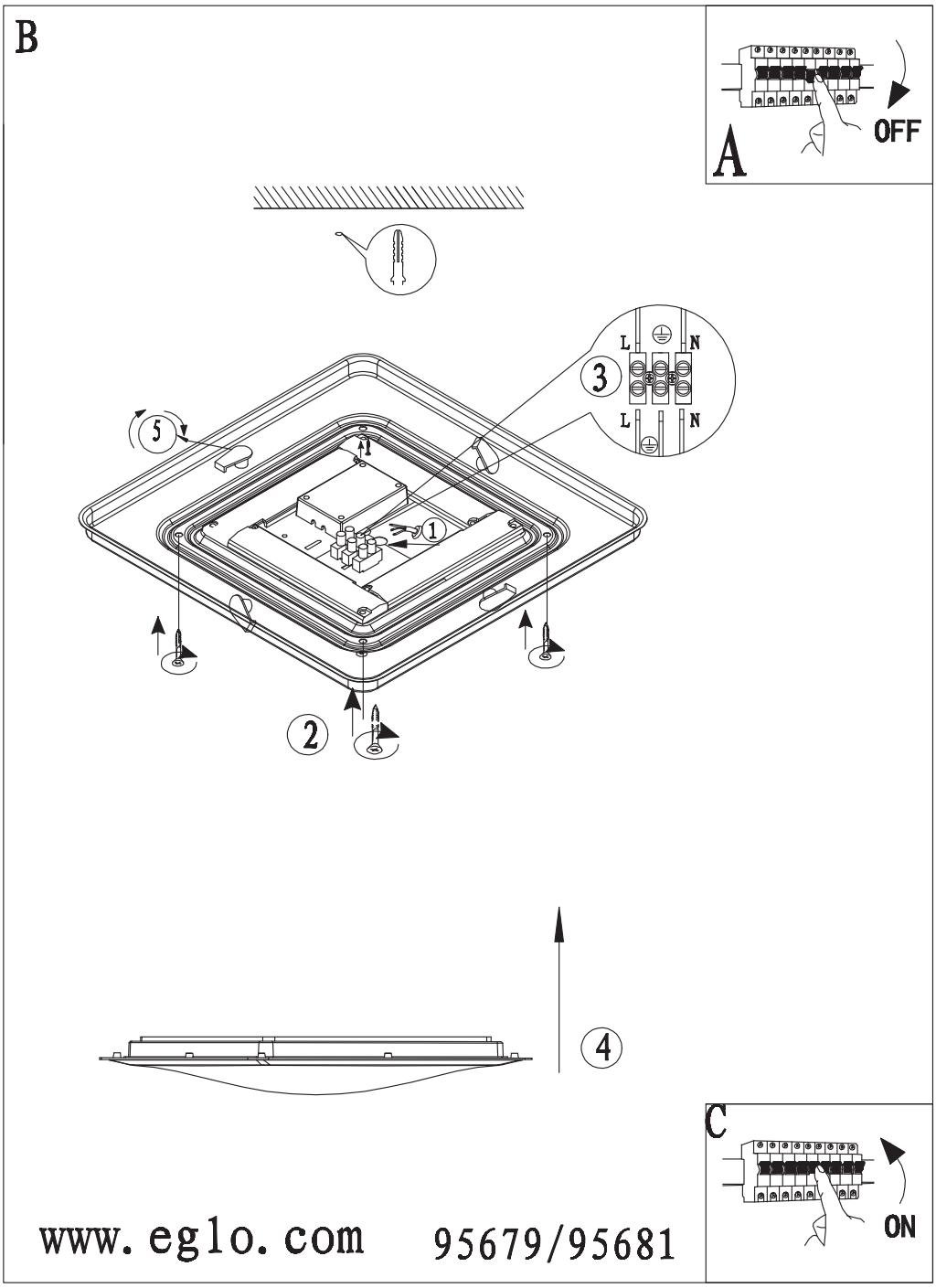Approved Daniel Kecskés
At 4:08 pm,May 18,2016